INSTRUCTIONS

LUGANO 10x10

CODE: 0183

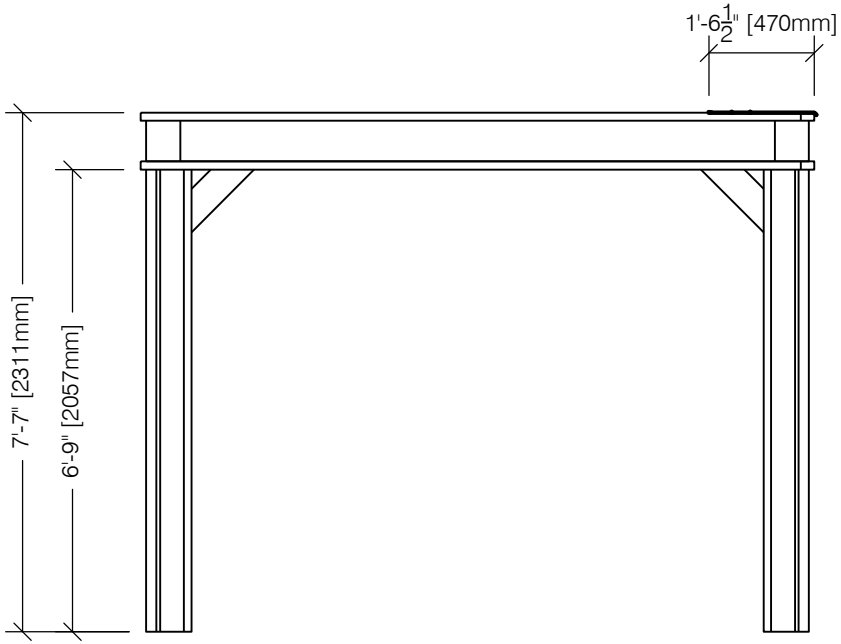

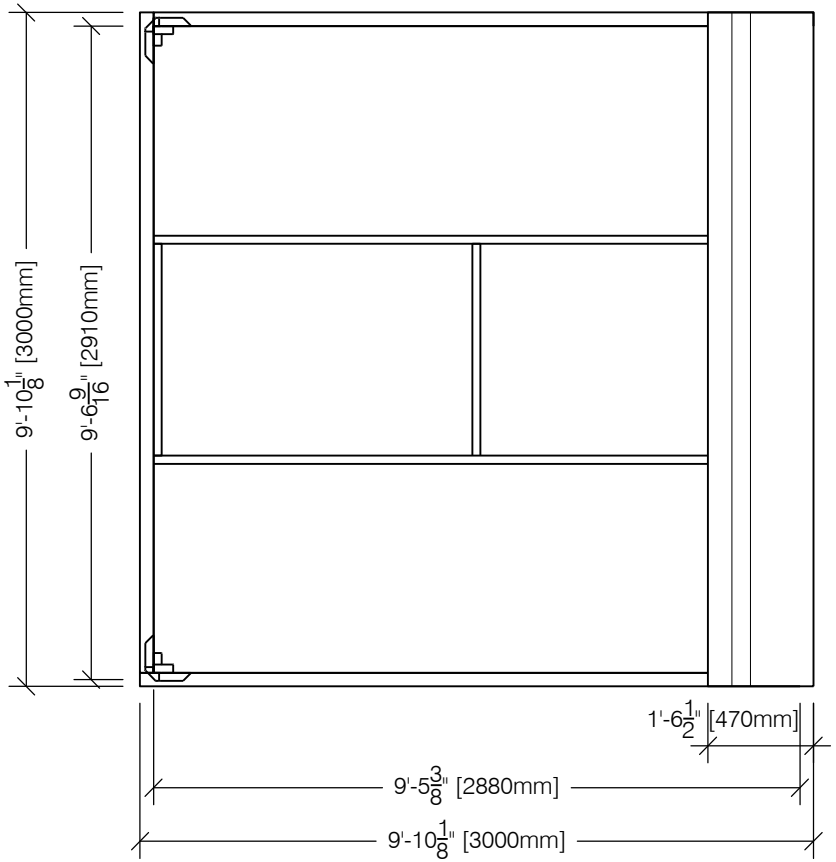

TOLL FREE/SANS FRAIS: 1-877-795-7423